CONTINENTAL - DECO TECH MANUAL

AND

½ MIDGET ENGINES

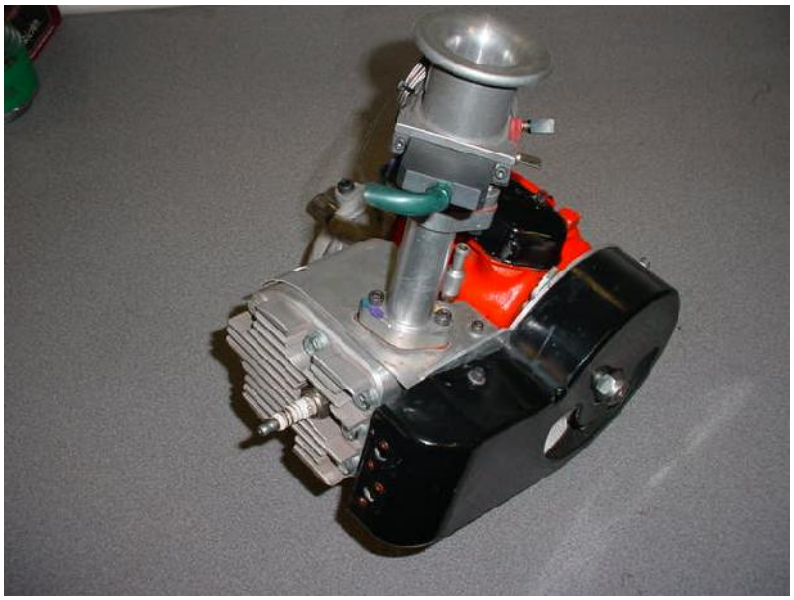

GENERAL RACING & ENGINE RULES

Rusty Barnard, QMA Technical Director

Updated: FEBUARY 1,2011

General Rules

Tech Clarifications

Please see QMA rule book, Article 6B for suspension information.

Filter Adapter Rules

Any air filter may be attached to the outside of the approved air filter adapter.
Outerwear style or equivalent can be used over carburetor only with no adapter.
The approved air filter adapter may be run with or without an air filter. Any air filter may be used with adapter as long as there are no devices inside the air filter or adapter that will alter the airflow into the carburetor.

Replace 1/1/03 rule
Effective 12/1/2003- All QMA quarter midget mufflers must be Briggs & Stratton Part # 294599 or equivalent.
No drilling holes on the baffles. Inside seam of baffle must be straight edged. (Some seams may not be parallel in baffle) You cannot cut off the threaded flange if it is to be used in a Honda. It is OK to weld a washer or nut on the flange for a place to apply safety wire. (Stock, mod, B, AA, all exhaust must pass though the muffler when going over scale)

Anyone found using illegal fuel additives when track fuel is provided, discipline will be as follows:
First Offense- 30 days suspension from all racing
Second Offense- 1 year suspension from all racing
Third Offense- lifetime suspension from all racing in QMA

Failure to use proper restrictor plate in designated classes, any alteration of restrictor plate, or improper installation of plate is cause for immediate DQ and applicable suspension within Deco or Honda Suspension Program.

The use of air filters during qualifying at asphalt and dirt events is illegal. The Senior Tech Official reserves the right to allow filters at any event that it's deemed necessary.

TECHNICAL INSPECTION PROCEDURE

Some or all of these procedures may be used at National and Local events.

QUALIFYING

1. All technical and safety rules are the responsibility of the handler: for example: weight/car, driver and combined tread and wheel base, nerf bars, bumpers, etc.

2. It is the handler's responsibility to make sure that the car and engine are weighed and properly sealed after qualifying. If there is any doubt check with the Tech. Director before the car leaves the scale/sealing area.
3. If repairs or maintenance are necessary that require the breaking of seals or an engine needs to be changed approval must be obtained prior to starting any work. All work must be done under the supervision of the Tech Director or his assistant. Engine must be resealed immediately after the work is completed.

TECHNICAL INSPECTION AFTER RACE

1. After racing cars finishing in a transfer or awards position must be weighed and have the engine seals checked. Cars finishing in announced position must be placed immediately in the designated impound area.
2. Engine and car may not be removed from the impound area unless directed to do so by the Technical Personal. If the car needs to be raced in another class or division handler must make sure weights and seals are checked prior to leaving the scale/impound area. If a restrictor has to be removed and or added it should be done in the presence of the Tech Officials and resealed. Removed restrictor plate must remain in the possession of the Tech Official until the engine is inspected.
3. No one may enter the impound area for any reason without first obtaining Tech approval.

ENGINE TECHNICAL INSPECTION

1. When instructed by a Technical Inspector the handler shall remove the engine and bring it to the Tech bench. It is the handler's responsibility to have all the tools necessary to remove and disassemble the engine. The handler should have the necessary storage containers for the disassembled engine components as time may prohibit reassembling.
2. The engine will be inspected by the Technical Inspector according to the QMA manual for the engine being inspected. The appropriate Tech sheet shall be used if possible. If during inspection a component is found to be illegal the inspector will get a second opinion. If the second opinion concurs the engine will be declared illegal and the car and driver will be disqualified. If the second opinion does not concur, the senior inspector in attendance will be consulted. The senior Tech Official's decision will prevail.
3. If the engine is disqualified the rules for that class must be strictly followed and the appropriate forms filled out.

PROTEST PROCEDURE

1. If the handler does not agree with the finding of the Tech Inspector he must write a protest to the Race Director within one hour. The engine must remain in the possession of the Tech Officials. The local Officials present at that race meet will handle this protest. (Race Director, Club President, Regional or National Officers) The handler always has the right for a second opinion. The second opinion may be obtained from either the Regional Tech or National Tech Director. In all instances the National Tech Director will have the final decision regarding the technical issue.

I. BASIC ENGINE:

A. This technical manual applies only to the following engines and their component parts:

1. Continental models AU7R & 717.
2. Detroit Engines model # DE7R.
3. Deco Grand models DE2R & DE7R.
4. Deco DE 7R-300

5. Modular engine (MB&T) aluminum block and cylinder and iron cylinder.
6. Other similar engines and components specifically approved by Q.M.A. as replacements for the preceding engines.
7. See Section VIII for 1/2 Midget engine specifications.

B. These engine rules are for use with the preceding engines when used in the Super Stock, Modified, "B" Modified and "AA" Modified classes.

C. All engines, in Deco classes will be four (4) cycle, normally aspirated, air-cooled and American made. Blocks will be cast iron or similar ferrous material. No overhead valves, fuel injection, blowers or free spinning flywheels. The gearbox is not considered a part of these engines; there fore any gearbox may be used. (The MB&T blocks and cylinders are made of aluminum)

D. All special (i.e. after market, of the same or different basic design) engines must be approved by Q.M.A.

E. All component parts, unless specifically exempt from technical inspection, are subject to technical inspection. All after market and special parts that are subject to technical inspection by these rules may be required to be approved by Q.M.A.

F. Continental blocks may be machined so as to bring them to Deco block dimensions.

G. NO MODIFICATIONS, ALTERATIONS, ADDITIONS, SUBTRACTIONS, DELETIONS, OR OTHER CHANGES ARE PERMITTED TO BE DONE TO THESE ENGINES OR THEIR COMPONENT PARTS UNLESS SPECIFICALLY ALLOWED IN THESE RULES.

II. MEASUREMENTS AND TOLERANCES

A. Unless otherwise stated all measurements will be made to plus or minus 1/2 of the least significant decimal place of each stated dimension. Dimensions given in fractional form are for reference only and will be converted to three place decimals for all technical measurements.

III. CLASS: NOVICE

A. WHEN THE ABOVE LISTED ENGINES ARE USED IN THE NOVICE CLASS ALL RULES AND SPECIFICATIONS FOR THE SUPER STOCK ENGINE CLASS WILL APPLY. WHEN OTHER THAN THE ABOVE ENGINES ARE USED FOR NOVICE SEE THE APPROPRIATE ENGINE TECHNICAL MANUAL.

B. RESTRICTOR PLATE: NOVICE CARS USING THIS SERIES ENGINE MUST RUN A Q.M.A. APPROVED RESTRICTOR PLATE. THE PLATE IS TO BE INSTALLED BETWEEN THE CARBURETOR AND THE INTAKE MANIFOLD WITH A GASKET ON BOTH SIDES. THE GASKET SHALL BE NO GREATER THAN .063” THICK WITH A MINIMUM AIR FLOW HOLE DIAMETER OF .750". NO TAPERS OR OTHER AIRFLOW ALTERING METHODS MAY BE USED. ALL AIR ENTERING THE ENGINE MUST PASS THOROUGH THE RESTRICTOR PLATE CENTER HOLE. RESTRICTOR PLATE MUST BE AN UNALTERED Q.M.A. APPROVED PLATE. RESTRICTOR PLATE IS TO BE A MAXIMUM OF .063" THICK WITH A .375” DIAMETER AIR FLOW HOLE, TOLERANCE = +. 000",-.003". RESTRICTOR PLATE MUST BE RUN AS RECEIVED, NO ALTERATIONS OF ANY KIND ARE ALLOWED.

ANODIZING ON THE PLATE MAY NOT BE DISTURBED. IDENTIFICATION TAB IS TO BE VISIBLE AT ALL TIMES. INSPECTION OF PLATE MAY BE DONE AT ANYTIME. INSTRUCTIONS INCLUDED WITH THE RESTRICTOR PLATE MUST BE FOLLOWED.

C. JR. NOVICE WILL RUN A RESTRICTOR PLATE UNDER THE CABURETOR WILL NOT RUN PLATE IN EXHAUST.

D. JR. STOCK WILL RUN A QMA APPROVED RESTRICTOR PLATE BETWEEN EXHAUST FLANGE AND PORT. HOLE SIZE 0.500" PLATE THICKNESS MIN. 0.047" MAX 0.052".

IV. CLASS: SUPER STOCK

A. FUEL SPECIFICATION:

Gasoline, automotive type only. No racing, white or aviation gasoline. No additives.

B. ENGINES AND THEIR COMPONENT PARTS USED IN THIS CLASS MUST BE STOCK, AS MANUFACTURED. EXCEPTIONS ARE SPECIFICALLY LISTED IN THESE RULES. NO OTHER ALTERATIONS, MODIFICATIONS, ADDITIONS TO OR SUBTRACTIONS FROM ANY COMPONENT, PART OR SPECIFICATION WILL BE PERMITTED IN THIS CLASS.

C. ENGINE BORE and STROKE: Bore: 2.125" + .030" + .004" equals maximum bore of 2.159". Stroke: 2.00" + or - .015". Stroke minimum equals 1.985". Stroke maximum equals 2.015".

TECHNICAL INSPECTION SEQUENCE

Note: The items listed are in the normal order of engine inspection.

1. Carburetor

Carburetors approved for use on Super Stock engines are the Deco pumper, Tillotson HL-357 w/restrictor plate. Novices using stock engine may only use the Walbro LMG or the Deco Pumper with the correct restrictor plates.
NO MODIFICATIONS TO THROTTLE SHAFT, BUTTERFLY OR AIR PASSAGEWAY. THEY MUST REMAIN STOCK. (EXCEPT VENTURI MAY BE REAMED TO 0.506" MAXIMUM, WALBRO LMG ONLY). DECO pumper carburetor venturi size 0.540" max, this carburetor can only be used with Deco manifold, manifold length minimum 3.700", 4.00"+/- 0.100 max, inside diameter 0.8510" Ref. Tillotson HL-357 venturi size 0.630" max. Tillotson HL-357 must run a QMA approved restricer plate; hole size 0.660 Plate thickness will be 0.050". Tillotson HL-357 must run stock Deco manifold FA410 style.

TECH PROCEDURE Walbro LMG: ONLY NOVICES MAY USE THIS CARB. Remove carburetor and check Venturi for 0.506" maximum and 0.475" minimum diameter. Check air passageway for alterations, none allowed. Check throttle shaft minimum diameter 0.210". Check butterfly, minimum thickness 0.024, Must use Gold, 0 .375" restrictor plate with this carburetor. 0.050" thickness max.

DECO pumper: Carburetor must remain as cast. No boring or polishing or altering allowed. Single pump stack only.
Specifications:

Manifold length: 3.700” min., 4.100 max.
Manifold inside diameter: 0.850” min/max.
Deco Manifold aftermarket: Manifold length 3.700” min., 4.100 max.
Manifold inside diameter min. 0.847” to 0.853 max.”
Intake manifold may be cut and hose placed in-between to clock in carburetor if it hits frame. Max length 4.100”max.
Venturi size 0.540” max.
Dump tube length: 0.912” min/max.
With taper gauge at back of carburetor, must see light under gauge.
Novices use only Purple, 0.375”, (0.050 thickness), restrictor.

Check venturi with no go gauge, 0.540” max. Check rear carburetor with taper gauge with gauge inserted to rear carburetor you should see a gap between the flat of the taper gauge and the base of the carburetor, see picture below.

Tillotson HL-357: Venturi bore 0.630 REF.
NO MODIFICATIONS OF ANY KIND ALLOWED ON DECO PUMPER AND TILLOTSON HL-357

DECO PUMPER

TILLOTSON HL357

DECO PUMPER TOOLS

DECO PUMPER

2. Air Cleaner

If used may be any type. Air cleaner adapter must not be over 1.375" in length, straight walled, flat bottomed and parallel with carburetor air passageway. Must be

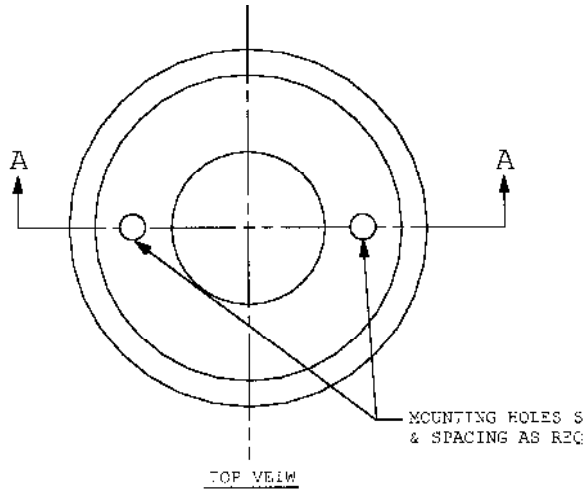

affixed to stock carburetor using existing air cleaner mount holes. If air cleaner is removed, the air cleaner adapter must also be removed.

TECH PROCEDURE: Check dimensions and corner radiuses.

Air Filter Adapter

Air Filter Adapter

Section A-A – All Dimensions Given in Inches

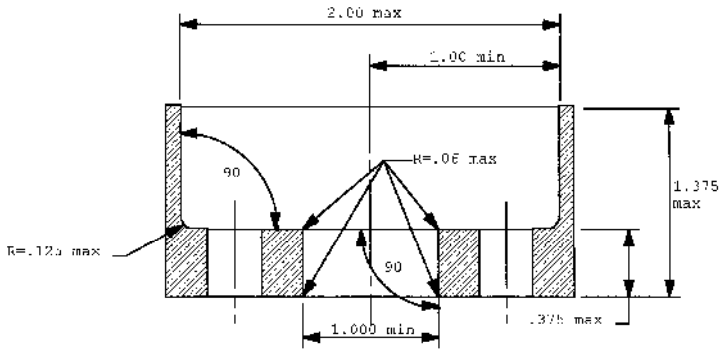

3. Manifold

Stock or after market intake manifold P/NAA7-F-444 or AA7-FA-410 only.

TECH PROCEDURE: Check for alterations to the inside of the manifold, no grinding, polishing or coatings allowed. Some of the early after market aluminum manifolds had a ring ground just inside the flange of the manifold so they would fit on the jig for machining of the flange. This is acceptable. There are two after market manufacturers of intake manifolds. One of the companies is using shot balls, and the other is using glass beads to clean the manifold after casting. The shot tends to darken and smooth the aluminum. It is not a coating or

performance enhancement, just a different process of production, either is acceptable.

4. Carburetor and Manifold Gaskets

Any make of fiber manifold gasket with a maximum thickness of .063" (1/16) may be used. No slots, perforations, or alterations that would allow additional air into the engine. No loose bolts, warped flanges, etc. that allow additional air into the engine. All air and fuel entering the engine must pass through the carburetor.

TECH PROCEDURE: Check gasket for maximum thickness. Check for any slots, perforations, loose bolts, warped flanges, or alterations that could allow additional air into the engine.

5. Head

Only stock unaltered cylinder heads part numbers AA7-A-504 and AA7-A-508 or Q.M.A approved after market heads may be used. All heads may have a 14mm Heli-coil or similar threaded insert installed to repair spark plug threads. Insert must be installed square to head and in original location. Heads may be bead blasted or wire brushed to clean carbon. No material may be removed from inside the combustion chamber area. (Smoker, NC, MRE, Deco)

Stock heads may have no alterations except the following:

A. Head sealing bead may be lightly sanded, but must not be removed. The sealing bead ranges from .005" to .014" (reference only). The combustion chamber above valves should measure between .263" to .270" (reference only).

B. Head boltholes on topside of head may be spot faced flat. No material may be removed from cooling fins. All holes in head must be in original location and not moved in any way whatsoever, such as tipped, moved over, up or down.

After market heads will be made by a Q.M.A. approved manufacturer.

A. No alterations allowed, except spark plug HeliCoil.

TECH PROCEDURE: Check for alterations inside of sealing bead area. Sealing bead and number must not be removed. No material removed from cooling fins. All holes in head must be in original location.

6. Head Gasket

Stock head gasket or gaskets of stock inside configuration made of copper, or aluminum may be used. Thickness .040" minimum to .066" maximum.

TECH PROCEDURE: Check .040" to .066" dimension around the outside of the sealing bead area on the gasket. Coating or gasket sealants may be used on gaskets. Recommend no fiber gasket, as thickness may not be legal after use.

7. Spark Plug

Any type automotive spark plug may be used.

8. Firing No Timing rule.

9. Points and Condenser

Any make of automotive type mechanical contact points may be used. Any make of automotive type condenser may be used. Only one set of points and one condenser may be used. **Condenser must be mounted on the engine.** Chip type condenser may not be used. Points can only be mounted horizontally on the point plate.

TECH PROCEDURE: After the firing has been checked remove the point cover and check for automotive type points and condenser. Be certain there is only one condenser. No chassis mounted condensers allowed.

10. Point Plate and Cover

Any style point plate and cover may be used.

11. All stock engines

Must run battery ignition. Any lobe type on distributor shaft.

12. Stroke

Stroke 2.00" +/- .015". Minimum 1.985", maximum 2.015".

TECH PROCEDURE: Check with dial indicator mounted on deck of block over piston, set indicator to “0” at B.D.C. and rotate crankshaft until maximum reading is observed, continue rotating to confirm "0".

13. Bore

Bore maximum 2.159". Cylinder bore must remain in original stock location.

TECH PROCEDURE: Check bore with plug gages. If not available, use dial calipers or inside micrometers.

14. Piston Extension

Piston not over .020" above top of block deck at T.D.C.

TECH PROCEDURE: Check with indicator mounted on deck of block, set indicator at “0” setting on deck, swing over piston and turn crank to maximum extension of piston out of block. Other methods may be used. Carbon may be removed.

15. Fan Shroud & Back Plate

Any shroud and backing plate allowed.

TECH PROCEDURE: Backing plate.

16. Cylinder and Head Baffles

Any make may be used.

17. Flywheel

Any type of flywheel may be used, maximum 32 ounces or 907 grams, minimum 27 ounces or 765 grams. Balancing is OK. Multi-piece flywheels must function the same as a one-piece flywheel.

TECH PROCEDURE: Check weight.

18. Cam Lift Measured Off of Valve

Maximum lift on exhaust. 177", maximum lift on intake .202".

TECH PROCEDURE: Check with indicator mounted on valve head and all valve to tappet lash removed Check from lowest point on Cam lobe. Maximum only, no minimum.

19. Camshaft Lobe Centerline Specifications

The difference between camshaft lobe centerlines must be between 102.25 and 104.25 camshaft degrees when measured in the following manner.

TECH PROCEDURE: Method of measurement: Install a shim between each tappet and valve stem of sufficient thickness to remove all valve lash. Install dial indicators above valves and attach degree wheel to flywheel. Set pointer to approximate T.D.C. Rotate crankshaft in direction of normal running (clockwise) only. Observe readings according to the following procedure to determine centerline of lobes.

A. Set dial indicator to read "0" at highest point of valve lift (peak of lobe). Rotate crankshaft clockwise until valve begins to lift. Then take degree wheel readings before and after the peak at the technical inspector's choice of one of the following dimensions: .020", .030", .040", .050" or .060".

B. Add before peak and after peak degree readings together and divide by 2. This is the centerline of this lobe. Degree readings must always be in reference to T.D.C. on the degree wheel.

C. Repeat steps A and B for the other lobe.

D. Add intake and exhaust lobe centerline degree readings together and divide by two. This is the number of camshaft degrees between the lobe centerlines. This must be between 102.25 and 104.25 degrees. If it is, then the centerline is legal and no further tests are to be done. If not continue with step E.

E. Repeat A and B using 3 different readings of which 2 must be between 102.25 and 104.25 degrees. If 2 are not then repeat steps A and B using all 5

readings of which 3 must be between 102.25 and 104.25 degrees. If 2 out of 3 does not pass and then 3 out of 5 does not pass then centerline is not legal.

EXAMPLE

Exhaust Lobe .020" before peak reading = 139.0 degrees B.T.D.C., .020" after peak reading = 72.0 degrees B.T.D.C. 139.0 + 72.0 = 211.0 divided by 2 = Exhaust centerline of 105.5 degrees B.T.D.C. Intake Lobe .020" before peak reading = 80.0 Degrees A.T.D.C., .020" after peak reading = 124.0 degrees A.T.D.C. 80.0 + 124.0 = 204.0 divided by 2 = Intake centerline of 102.0 degrees A.T.D.C. 105.5 exhaust + 102.0 intake = 207.5 crankshaft degrees divided by 2 = 103.75 camshaft degrees. Difference in cam lobe centerlines = 103.75 camshaft degrees.

20. Valve Springs

Any Type.

21. Valve Spring Seat

Valve spring seat may be spot faced.

22. Keeper & Retainer

Any retainers and keepers allowed.

23. Valve Guides

Any size valve guides may be used. They must be installed so that centerline of the valve guide bore is parallel to centerline of the corresponding tappet guide bore (no tipping or offsetting of guides).

TECH PROCEDURE: Check for tipping or offsetting to increase lift. QMA valve location plate will be bolted to deck surface and engine slowly rolled over by hand. Valves must pass through holes in plate. Three bolts MININUM will be used to locate plate.

24. Valves

Stock and after market valves may be used, and the following specifications must be met.

A. Intake Valve:

1. Diameter of head .925" maximum.
2. Edge of valve must be above the deck surface of the block.

B. Exhaust valve:

Same as the intake valve accept the following:

1. Diameter of head .852" maximum.

TECH PROCEDURE: Measure.

25. Valve Seat

Valve seats may be installed or replaced if necessary. Inside diameter must remain stock, intake .825" maximum, exhaust .755" maximum. No limitation on outside diameter of valve seat. Must be installed flat with deck. Any seat angle may be used. Top cut diameter shall not exceed 1.000”.

TECH PROCEDURE: Check inside diameter of seat for maximum dimension of .825". Outside diameter of top cut is very hard to measure, use dial calipers.

26. Intake Port

(Novice, Super Stock, Modified) The intake port shall be round at the flange and valve seat within 0.015” and 0.825” maximum diameter at the flange, 0.250 from the port flange down must be 0.825” maximum diameter at the valve seat. The port may be polished, ground, machined, or sleeved to suit. Welding, brazing or epoxy and like substances may be used to repair or fill the port. The top of the port shall be no more than .375” from the head deck of the block. This dimension shall be checked

with a dial caliper or ball micrometer. The port flange shall be perpendicular within 1 degree max to the head deck surface. Parameter shall be checked with a suitable protractor. The original manifold bolthole locations shall be used. Threads may be repaired as necessary. From the edge of the valve seat to port flange max 1.050".

TECH PROCEDURE: Check port size with plug gages or dial calipers. See pictures on next page.

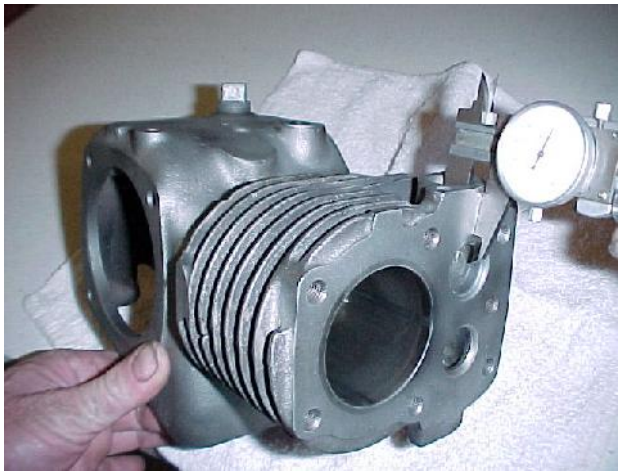

Deck to Port Wall

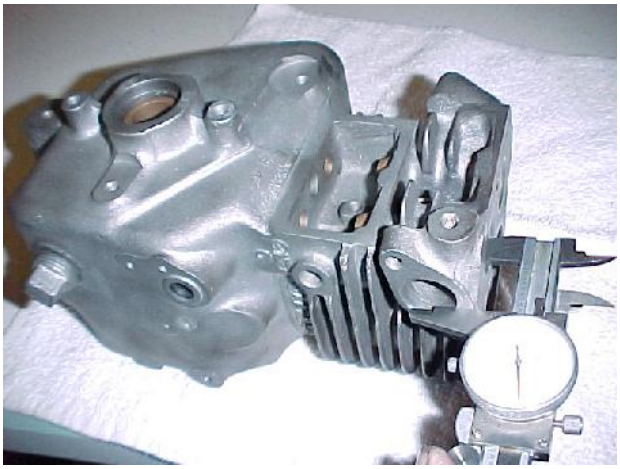

Valve Seat to Port Flange

27. Exhaust Port

(Novice, Super Stock, Modified) The exhaust port shall be round at the flange and valve seat, within 0.015" and measure no more than 0.755" at the valve seat and 0.875" max at flange, min from the flange up 0.125" max 0.015" out round and a min round of 0.775". The port may be polished, ground, machined, or sleeved to suit. Welding, brazing, or epoxy and like substances may be used to fill or repair the port. The top of the port shall be no more than .400" from the head deck of the block. This dimension shall be checked with a dial caliper or ball micrometer. The port flange shall be perpendicular within 1 degree maximum of the head deck surface. This parameter shall be checked with a protractor.

27A. Exhaust Port Below Counter Bore

1. Port center line will be no more than .750" from deck of block
2. To determine port center, measure port opening height perpendicular to deck of block (example .625")
3. Divide port height by 2 (example .625/2-.3125)
4. Measure port wall to block deck thickness (example .428")
5. Add line items 3 and 4 together (example .428"+.3125=.7405")
6. Port opening must be square, rectangular, or oval in shape. No complex shapes permitted

The intent of these specifications is to limit excessive port relocation and exclude unusual port configurations that would make determination of port center complicated. (No “drop port” or “tilt port configurations” permitted)

TECH PROCEDURE: Check port size with plug gages or dial calipers. See drawing.

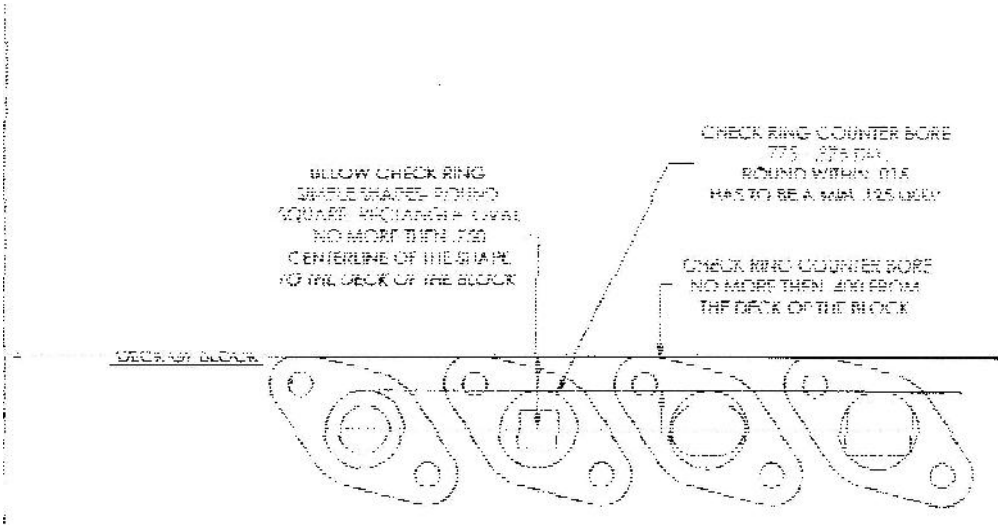

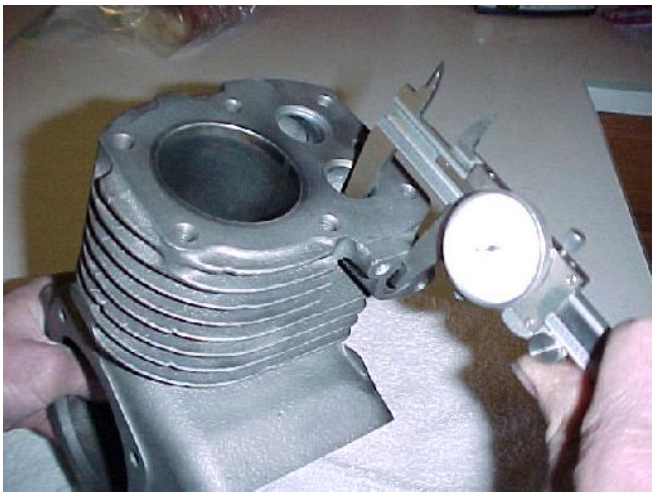

Valve Seat to Port Flange

28. Piston

Any flat top piston is allowed. No part of the piston may protrude more than .020” above block deck at top dead center (carbon may be removed).
TECH PROCEDURE: Check for flattop.

29. Rings

Any type allowed.

TECH PROCEDURE: Visual

30. Rod

Any connecting rod allowed.

TECH PROCEDURE: None.

31. Crankshaft

Any crankshaft allowed.

TECH PROCEDURE: Visual.

32. Camshaft

Stock or after market.

Measurements:

Heel to Peak - Exhaust .988" maximum -.975" minimum Intake 1.013" maximum -1.000" minimum. Heel to Heel – Exhaust .811" minimum .821" maximum Intake .811" minimum .821" maximum. Difference or total lift: exhaust .177" maximum Intake .202" maximum. Maximum lift on exhaust .177", maximum lift on intake .202". Base circle maximum .007" out of round. Heel to heel minimum .811" maximum .821". A new gear may be installed. Camshaft must be a one piece and of conventional design other than press on gear. Cam and gear must be made of ferrous metal. Lobes must fit through Q.M.A. template. Cam pinhole may be drilled to a larger size. An additional cam pin may be used.

33. **Tappet Guides**

Any size valve guides or tappet guides may be used. They must be installed so that the centerline of the valve guide bore is parallel to the centerline of the corresponding tappet guide bore and intersect the centerline of the cam axel shaft bore.

34. Tappets

Any flat-based tappets may be used. Maximum allowance for wear (dished) is .002". Any size tappet guides may be used.

35. Deck Height

Measured from block deck to the center of point/distributor shaft, 4.670" max.

TECH PROCEDURE: Measure from block deck to point/distributor shaft, with depth micrometer thorough valve guide and tappet guide. Add 1/2 of diameter of point/distributor shaft to micrometer measurement to obtain deck height.

36. Oil Pan

Any oil pan may be used. Oil pump may be run in this class.

TECH PROCEDURE: None

37. Crankshaft Bushing or Bearing

Any bushing or bearing may be used.

TECH PROCEDURE: Visual

38. Block

Machining is allowed so as to bring Continental blocks to Deco block dimensions. Block may be externally strapped and broken block may be brazed or welded. Welding, brazing or other repairs may be done in ports or combustion area. Breather may be added, except block may be drilled to hold breather baffle. Boss on block may be removed to receive gearbox. Welding inside block is okay, but must not alter any original dimension or location of holes. Except as allowed above any block altered or repaired in any way that causes the original dimensions to be changed is illegal for the stock class.

TECH PROCEDURE: Visually check block for any alterations that change the original dimensions.

39. Sleeves

Any type allowed.

TECH PROCEDURE: Visual check.

40. Miscellaneous

Any kind of nuts, bolts, studs or washers are allowed and may be safety wired. Stripped out threads may have Heli-coil or similar threaded inserts installed provided the original hole location and the same thread size is retained. Gear Box is not considered a part of the engine; therefore any type gear reduction may be used.

V. CLASS: MODIFIED

A. FUEL SPECIFICATION: Same as Super Stock class.

B. ENGINE: Same as Super Stock. Bore 2.159" maximum. Stroke 2.000" + or - .015".

C. All modifications allowed in this class except for the following:

1. Block

   A. Broken blocks may be repaired by welding, brazing or strapping. Welding, brazing or other repairs may be done in ports or combustion area.

B. Cylinder sleeves may be of any material. Cylinder bore must be centered on and parallel to the original cylinder bore centerline.

C. Intake and exhaust valve centerline must remain parallel to the original valve centerline.

D. Tappet centerline must remain parallel to the original tappet centerline.

E. Combustion chamber surfaces must remain the same as Super Stock.

2. Camshaft

Cam and cam technical procedures are the same as Super Stock. Cam pin hole may be drilled to a larger size. An additional cam pin may be used.

3. Deck Height

Same as super stock.

4. Flywheel

Any type of flywheel may be used, maximum 32 ounces or 907 grams, minimum 27 ounces or 765 grams. Balancing is OK. Multi-piece flywheels must function the same as a one-piece flywheel.

5. Valve Seats

Same as Super Stock.

6. Cylinder Head

Same as Super Stock.

7. Head Gasket

Same as Super Stock.

8. Piston

Same as Super Stock.

9. Exhaust Port

Same as Super Stock.

TECH PROCEDURE: Check port size with plug gages or dial calipers.

10. Intake Port

Same as Super Stock.
Gasket on intake port to manifold is optional.

TECH PROCEDURE: Check port size with plug gages or dial calipers.

11. Tappets and Tappet Guides

Same as Super Stock.

12. Valves and Valve Guides

Same as Super Stock.

VI. CLASS: "B" MODIFIED

A. FUEL SPECIFICATION: Same as Super Stock.

B. DRIVE WHEEL: Two wheel rear drive optional.

C. ENGINE: Bore 2.125" + .060" + .004" or 2.189" maximum Stroke 2.000" +/- .015".

D. Maximum intake valve size 1.480

E. All modifications allowed in this class except the following:

1 Camshaft Same as Super Stock.
2. Flywheel Same as Modified.
3. Any Type of Tappet and Tappet Guides Allowed.

VII. CLASS: "AA"

A. FUEL SPECIFICATION: Gasoline is the same as Super Stock or straight methanol, no additives.

B. Head bolts must remain in stock location

C. DRIVE: Two wheel rear drive optional.

D. ENGINE: Bore 2.250" + .060" + .004" clean up, 2.314" maximum. Stroke 2.000" plus or minus .015". No overhead valves. Must be air-cooled.

E. All other engine modifications allowed in this class.

VIII. CLASS: 1/2 MIDGET

A. FUEL: Same as "AA"

B. ENGINE RULES:

Any make 4-cycle engine, American or foreign made. 253 cubic centimeters or 15.439 cubic inches maximum displacement. No water-cooled and radiators, No blowers, no fuel injection. All other modifications allowed.

To calculate displacement use the formula (Bore divided by 2) squared x 3.1416 x stroke = displacement. (Example: If bore = 2.659" and the stroke = 2.000", then 2.659

divided by 2 = 1.3295, squared = 1.76757025 x 3.1416 x 2.000 = 11.105997 cubic inches.)

When using a World Formula or Animal Block a Scatter Plate must be used. (See Page 20) If scatter plate is not in place this will be a DQ

C. EXHAUST:

½ midget mufflers must be Briggs & Stratton Part # 294599 or equivalent. No drilling baffles. You can cut the thread off and it is OK to weld a washer on the flange for a place to apply safety wire. (All exhaust must pass though the mufflers when going over scale)

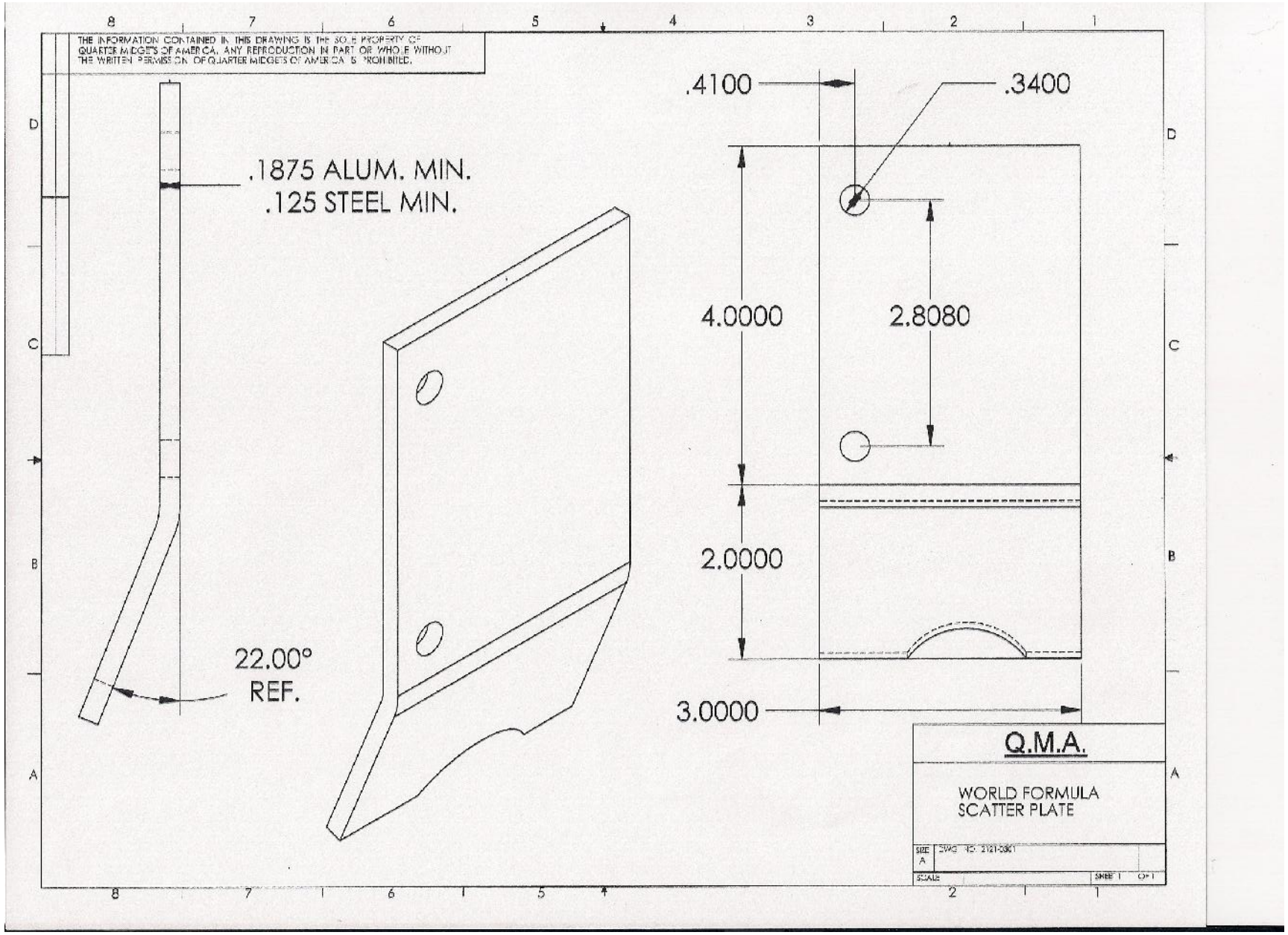
THE INFORMATION CONTAINED IN THIS DRAWING IS THE SOLE PROPERTY OF QUARTER MIDGETS OF AMERICA. ANY REPRODUCTION IN PART OR WHOLE WITHOUT THE WRITTEN PERMISSION OF QUARTER MIDGETS OF AMERICA IS PROHIBITED.
.1875 ALUM. MIN.
.125 STEEL MIN.
22.00°
REF.
.4100
.3400
4.0000
2.8080
2.0000
3.0000
Q.M.A.
WORLD FORMULA
SCATTER PLATE
SIZE
A
SCALE
SHEET 1 OF 1